Accessories

Intake connector

for tube connection

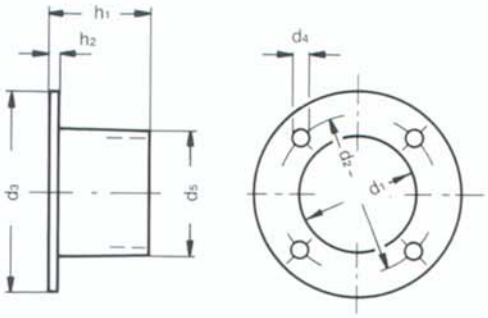

Blower type	d_1	d_2	d_3	d_4	d_5	h_1	h_2	Part no.	Code no.
FD 62 FD 64	140	182	210	11	154	100	6	14 407	1177
FD 72 FD 74	160	200	234	11,5	174	100	12	14 343	0504

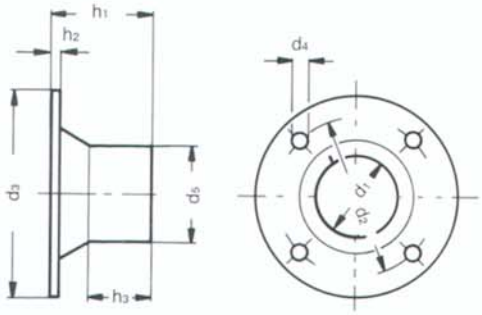

Blower type	d_1	d_2	d_3	d_4	d_5	h_1	h_2	h_3	Part no.	Code no.
FD 62 FD 64	88	182	210	11	100	100	6	66	14 201	0766
FD 72 FD 74	86	200	234	11,5	98	100	12	66	14 515	0312

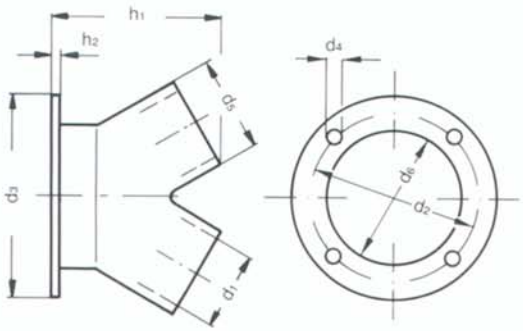

Blower type	d_1	d_2	d_3	d_4	d_5	d_6	h_1	h_2	Part no.	Code no.
FD 62 FD 64	88	182	210	11	99	140	178	6	14 301	0502
FD 72 FD 74	88	200	234	11,5	98	160	178	8	14 782	0325

Dimensions in mm. Subject to modifications.

Accessories

Discharge connector

for tube connection

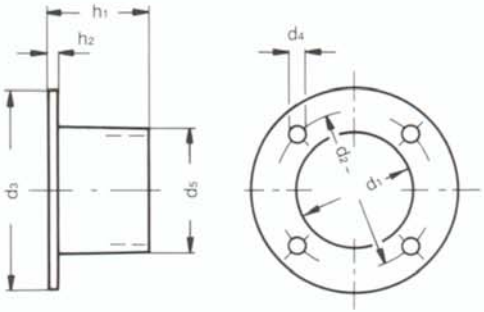

Blower type	d_1	d_2	d_3	d_4	d_5	h_1	h_2	Part no.	Code no.
FD 62 FD 64	125	168	200	11	139	100	6	14408	1178
FD 72 FD 74	160	200	234	11,5	174	100	12	14343	0564

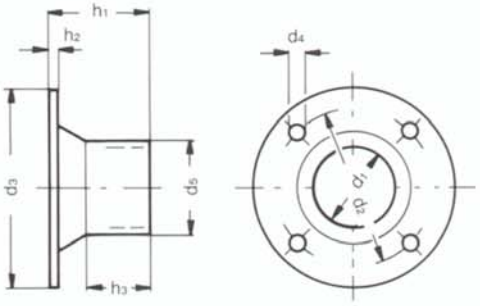

Blower type	d_1	d_2	d_3	d_4	d_5	h_1	h_2	h_3	Part no.	Code no.
FD 62 FD 64	88	168	200	11	100	100	6	68	14202	0767
FD 72 FD 74	86	200	234	11,5	98	100	12	66	14515	0313

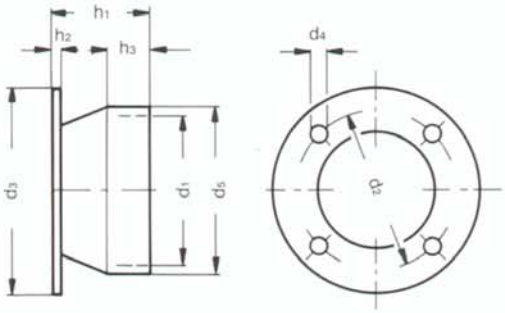

Blower type	d_1	d_2	d_3	d_4	d_5	h_1	h_2	h_3	Part no.	Code no.
FD 62 FD 64	163	168	200	11	174	100	6	45	14300	0495

Dimensions in mm. Subject to modifications.

Elektror